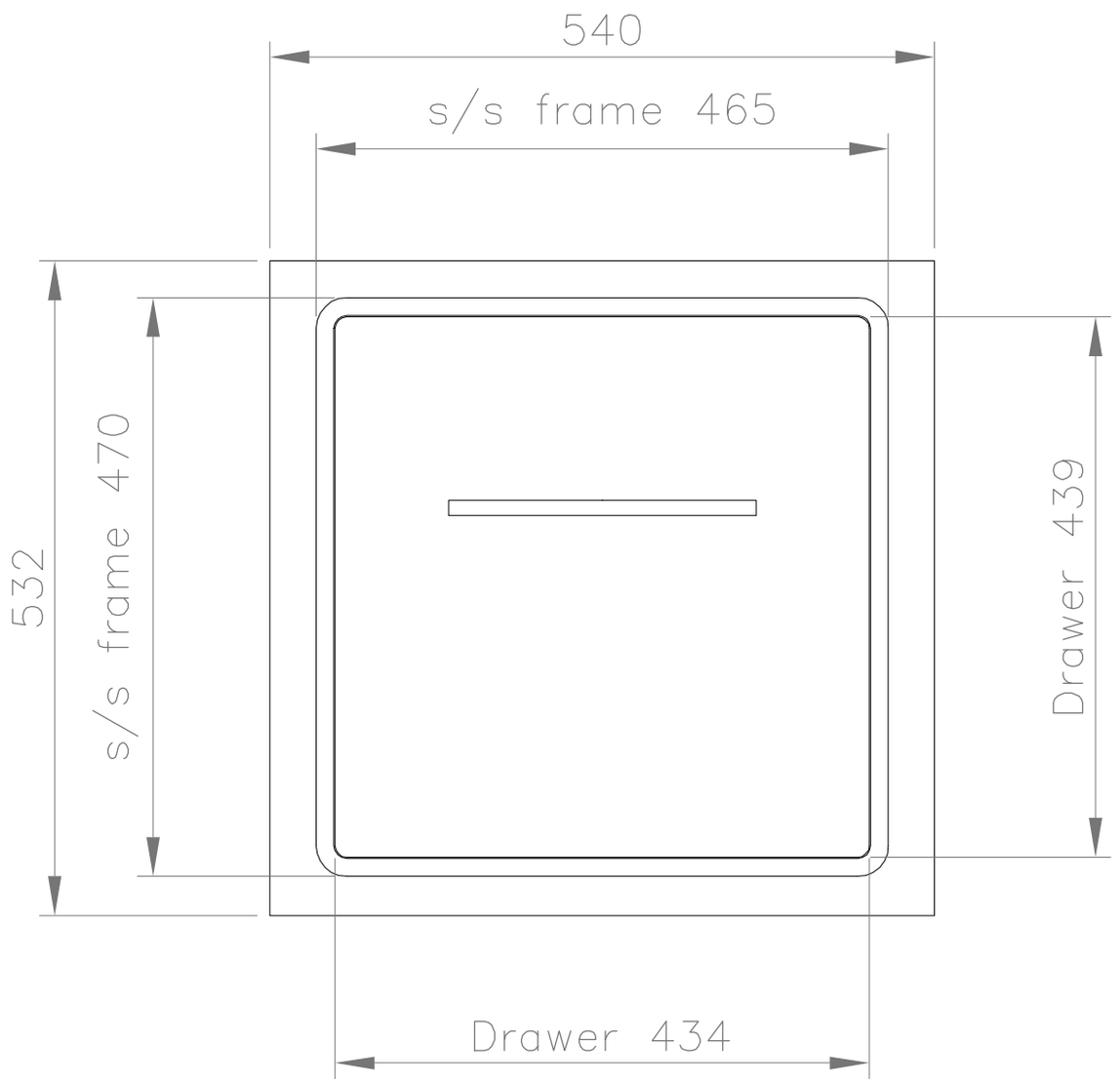

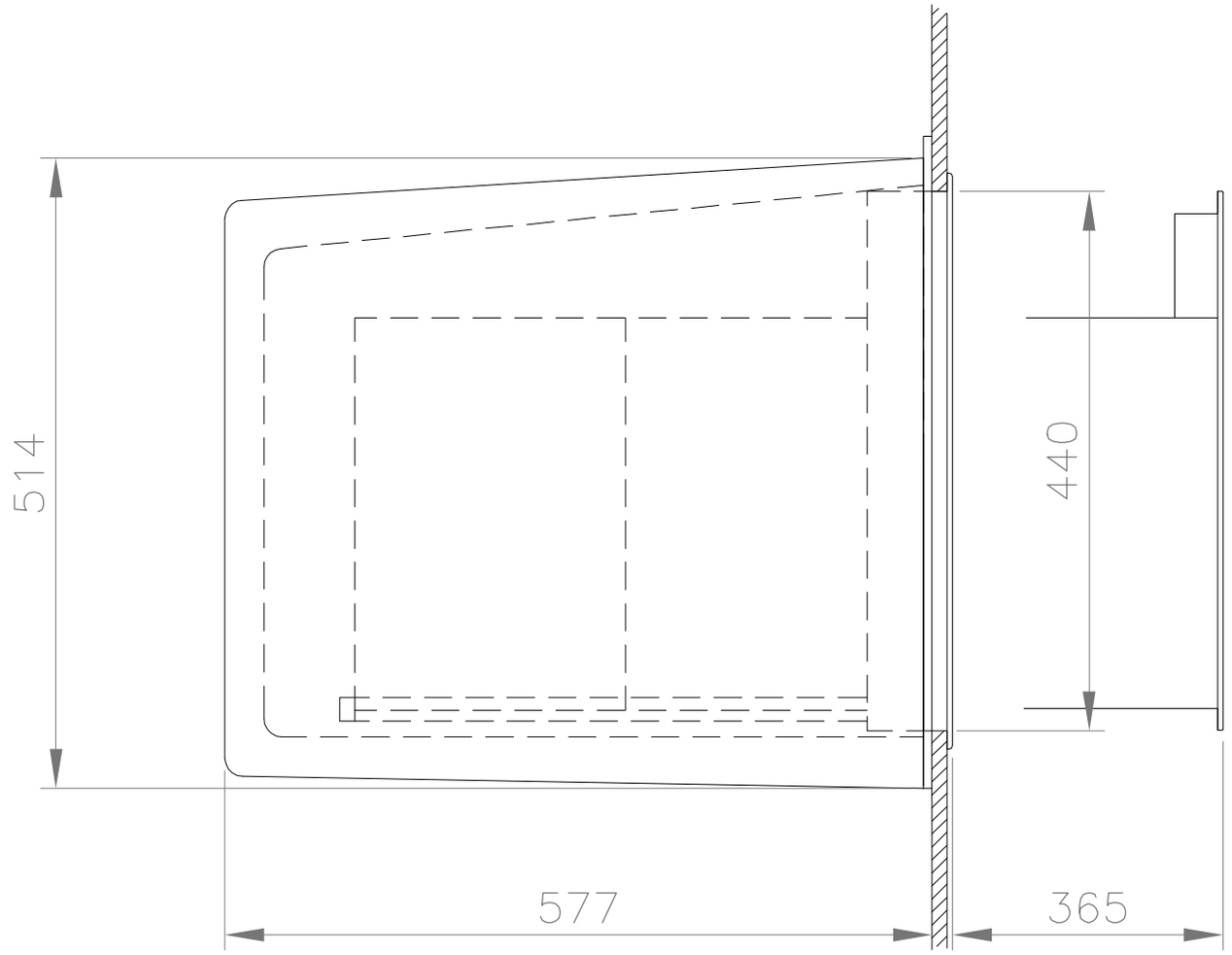

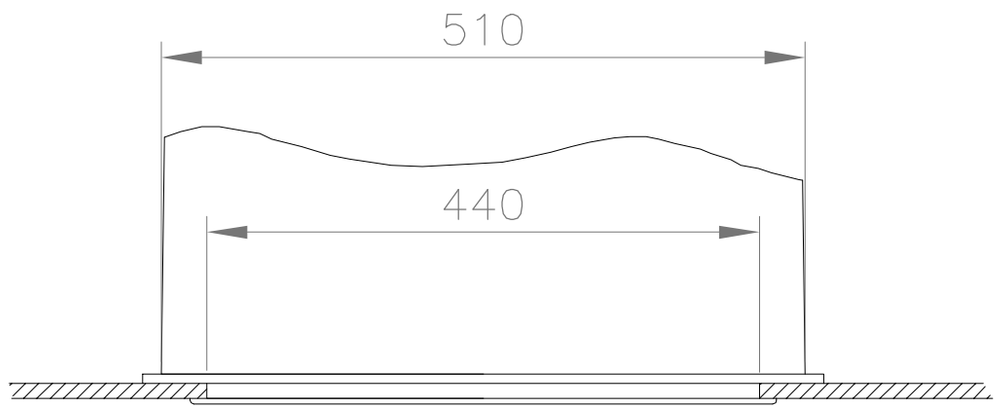

RevNo	Revision note	Date	Signature	Checked

Itemref	Quantity	Title/Name, designation, material, dimension etc			Article No./Reference	
Designed by		Checked by	Approved by – date	Filename	Date 021125/LLG	Scale
Owner Indel Marine S. Agata Feltria Italy				Title/Name Isotherm Drawer Box 105L		
				Drawing number DB105	Edition	Sheet